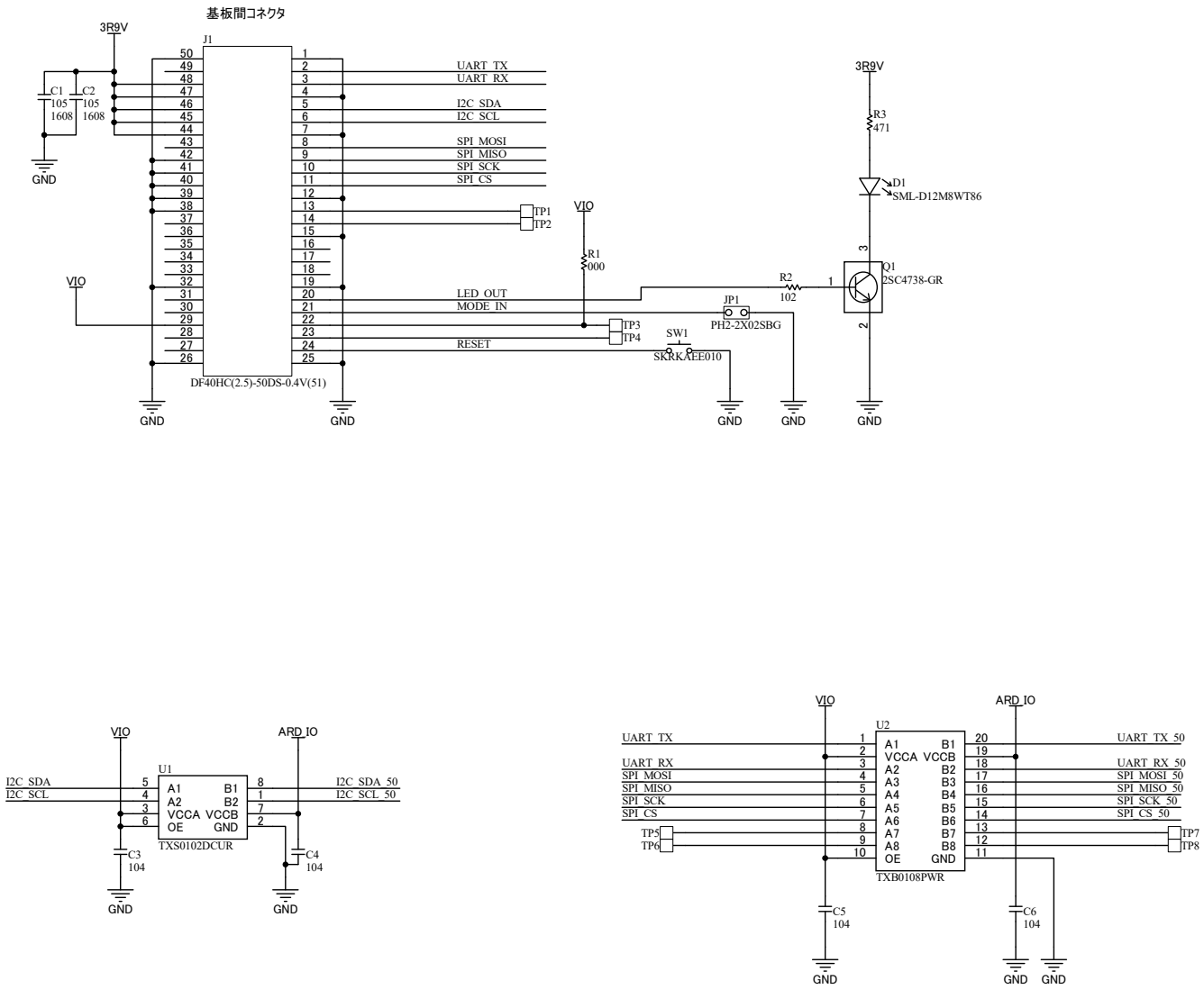

Printed: 2016/10/06

Title SCO-ARD-01			sakura.io
Size: A3	Number:	Revision: 1.0	Sheet 1 of 2 Date: *
File: Sheet1.SchDoc			

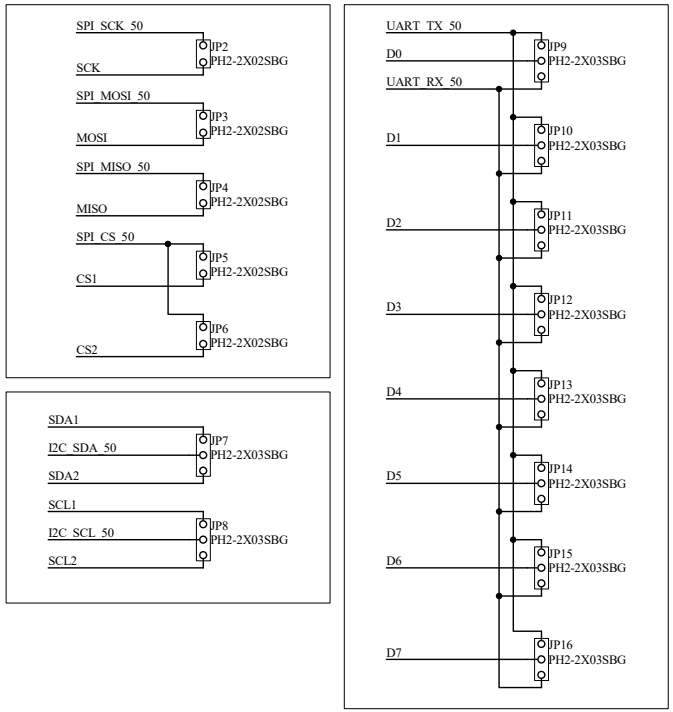

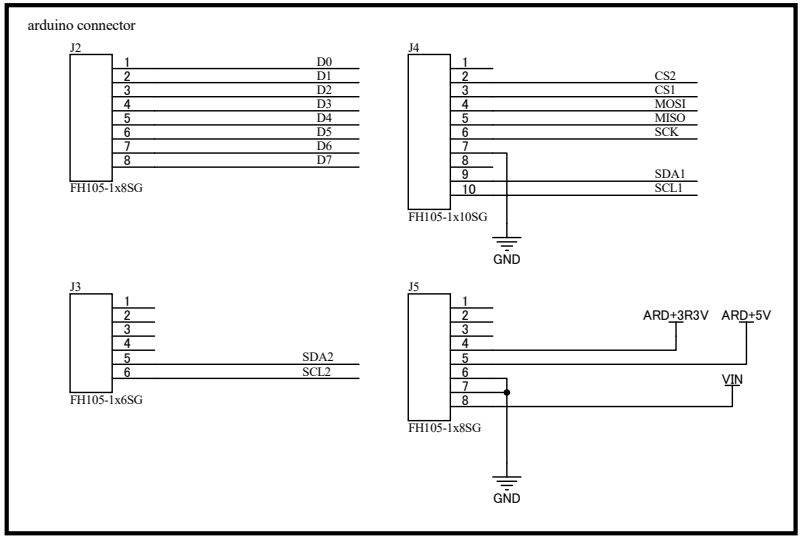

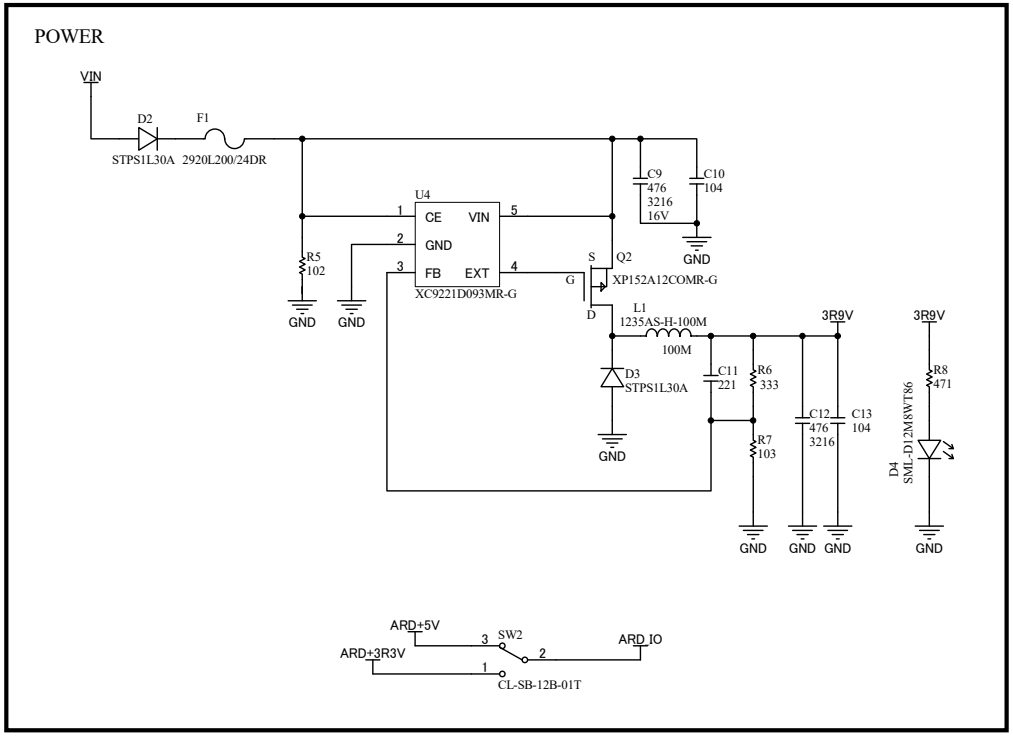

Printed: 2016/10/06

Title SCO-ARD-01			sakura.io
Size: A3	Number:	Revision: 1.0	Sheet 2 of 2 Date: *
File: Sheet2.SchDoc			